NOTES:

1. For general notes refer to sheet 1.
2. All dimensions are in millimetres.

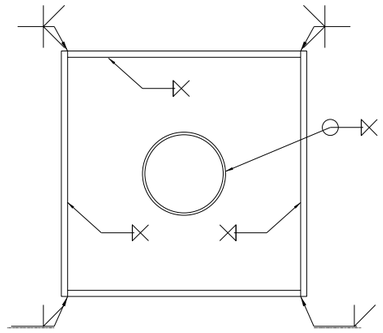

Column Fabrication Detail

Scale 1:20

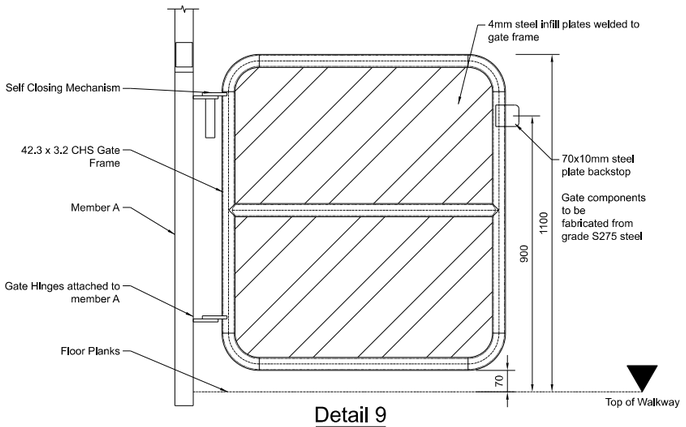

Detail 9

Scale 1:20

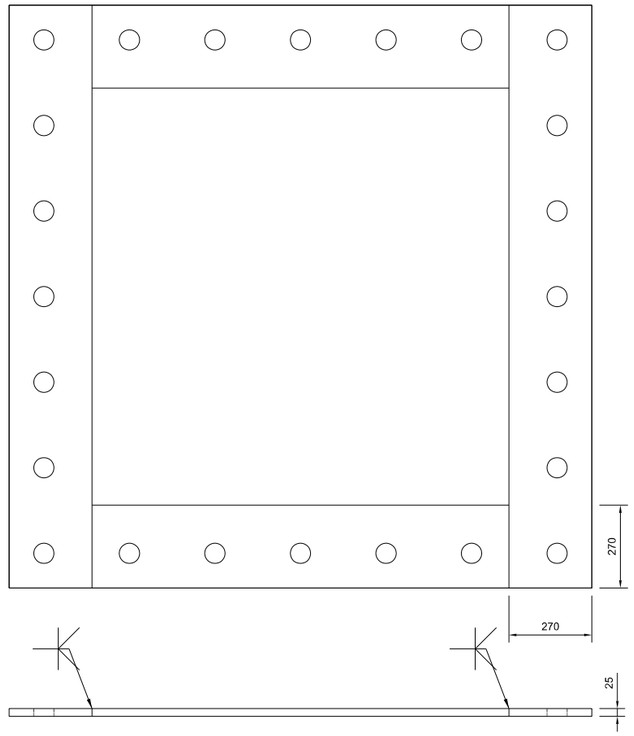

Detail 8 - Anchor Plate Detail

Scale 1:20

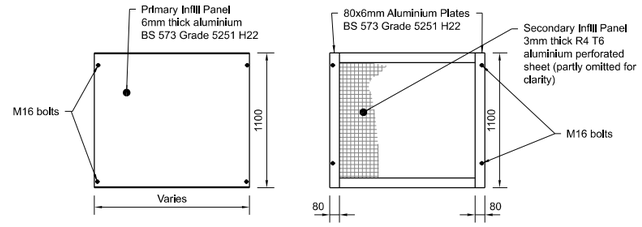

Infill Panel Details

Scale 1:50

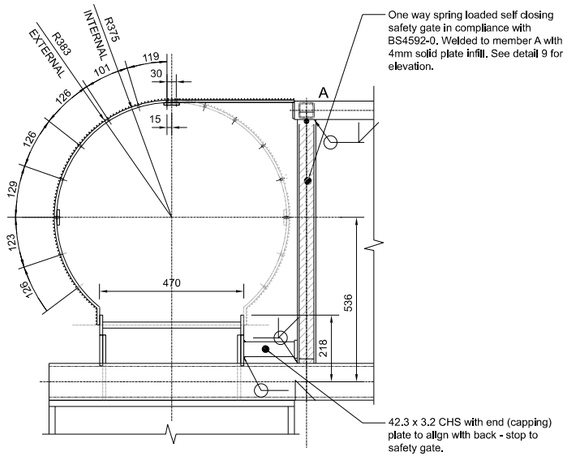

Section K-K

Scale 1:20

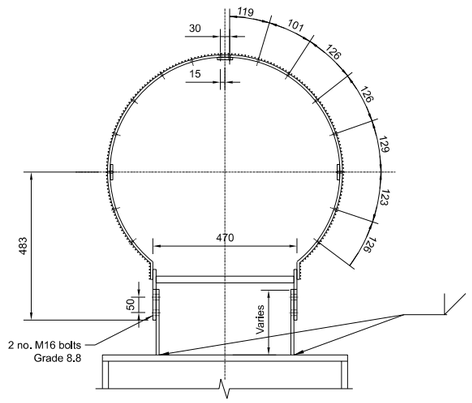

Section L-L

Scale 1:20

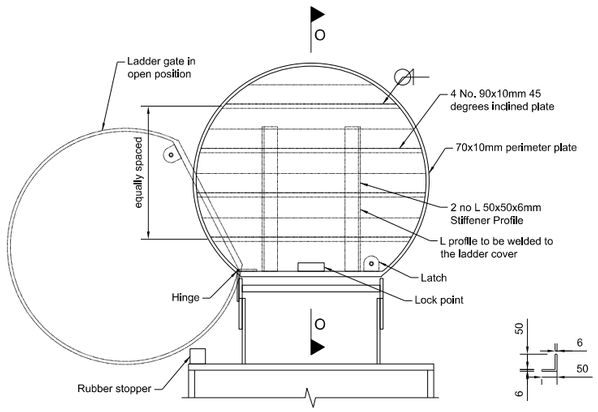

Section M-M

Scale 1:20

2 no L 50x50x6.0 Stiffener Profile

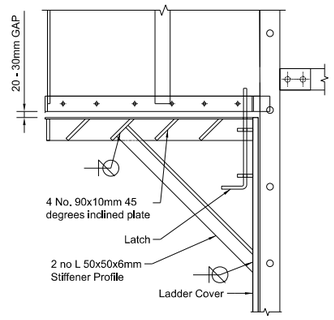

Section O-O

Scale 1:20

Bonneagar Iompair Éireann
Transport Infrastructure Ireland

ACTIVITY: Construction & Commissioning

PUBLICATION TITLE:
GANTRY GROUP 9
GENERAL ARRANGEMENT OF GANTRY GROUP 9 SHEET 3 OF 3

STREAM	SHEET	HISTORICAL REFERENCE	DOCUMENTATION SET	PUBLICATION DATE	PUBLICATION NUMBER (ACTIVITY)	(STREAM)	(DRAWING NUMBER)
STANDARD CONSTRUCTION DETAIL (SCD)	A3		STANDARD	DECEMBER 2025	CC	SCD	01827